# *STUDIES ON THE EFFECT OF AIR TEMPERATURE ON LEAN PREMIXED PREVAPORISED TURBULENT SPRAY FLAMES*

**C. Pichard, C. Chauveau and I. Gökalp**
**pichard@cnrs-orleans.fr**
**Laboratoire de Combustion et Systèmes Réactifs**
**Centre National de la Recherche Scientifique**
**1C avenue de la Recherche Scientifique**
**45071 Orléans cedex 2 – France**

**Abstract**

Lean, partially prevaporised and premixed turbulent spray flames of n-heptane/air mixtures are studied experimentally for various temperatures of the coflowing air at ambient pressure. Air temperature is changed by steps of 5 K from 298 K until a temperature at which we can not detect enough droplets. The air to liquid ratio is also systematically changed to vary the global equivalence ratio and the initial spray droplet mean diameter. Measurements are performed for three equivalence ratios ($\phi$ = 0.65, 0.72 and 0.79) and for four atomising air flow rates (0.063, 0.090, 0.115 and 0.140 g/s). For all flames, phase Doppler anemometry (PDA) is used to characterise the droplet velocities and diameters and to observe the influence of the coflowing air temperature on the droplets inside the flame.

**Introduction**

Combusting sprays, and particularly lean premixed and prevaporised combustion, are very important for a large number of propulsion applications. Lean premixed and prevaporised combustion appears to be a promising technology in significantly reducing $NO_x$ emissions from gas turbines because vaporisation and mixing of fuel and air under lean conditions upstream the reaction zone lead to a low temperature flame which reduces the production of nitrogen oxides [1, 2, 3]. Important physical processes involved in combusting sprays, such as interactions between droplets, between the droplets and the gas phase, the vaporisation of the droplets associated with heat release are not completely understood, because they are all coupled. In order to contribute to the analysis of the flame structure in partially prevaporised and premixed spray flames and to build a rather complete data base for model validation, an experimental study of lean premixed prevaporised turbulent spray combustion is conducted at the laboratory. A first work was made with air at room ambient conditions of temperature and pressure [3]. Here we present, for the same experimental set-up, the influence of the temperature of the coflowing air on the characteristics of the droplets inside the flame. The droplet velocity and size distributions are characterised by Phase Doppler Anemometry.

**Experimental methods**

***Experimental facility***

A schematic of the burner used for the present study is presented in Figure 1. An air-assisted atomizer (plain-jet type, Figure 2) of outer diameter 8 mm is placed coaxially at the centre of a D = 25 mm inner diameter tube, downstream of a grid generated turbulent coflowing air. The atomizer exit hole has a diameter of 0.8 mm. At the exit of the burner, an annular premixed methane-air pilot flame is used to stabilize the spray flame.

The distance from the atomizer tip to the burner exit, $L_{TE}$ , may be varied, increasing the residence time of the droplets inside the burner and thus the duration of prevaporisation and premixing. In the present study, we consider only the distance $L_{TE}$ of 160 mm, which corresponds to a residence time close to 18 ms for air at ambient temperature. This is the shorter distance possible to stabilize a flame because below this value, we observe a flashback of the flame. For all conditions, no fuel accumulation on the burner walls from fuel droplet impacts was observed.

The burner is mounted vertically on a three dimensional traverse system with vertical and radial displacements. The flow is going upward and is axisymmetric. Liquid fuel is supplied from a pressurised tank (~1.5 bars) and air from a compressor line. Calibrated flow meters are used to measure all flow rates. For this study, we use two different liquid fuels : n-heptane and n-decane but the results presented here concern only n-heptane.

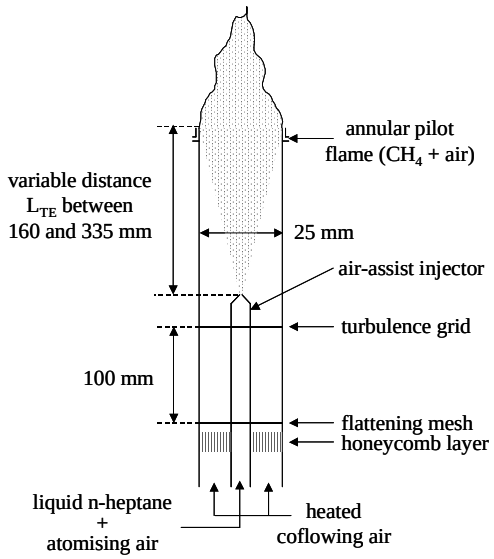


**Figure 1.** Schematic of the burner.

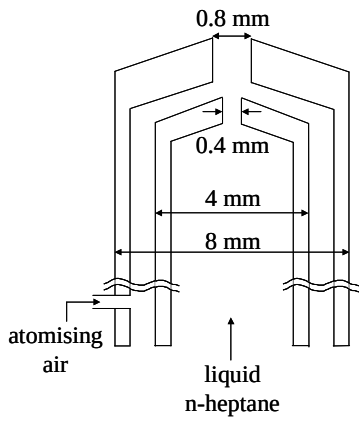


**Figure 2.** Schematic of the atomizer.

The coflowing air flow rate is maintained constant for all cases (1.69 g/s) but we change the atomising air flow rates to vary the initial spray droplet diameter, and the fuel flow rates to modify the global equivalence ratio. The flow rates for each studied condition are shown in Table 1, the air to liquid ratio corresponding is indicated Table 2.

| heptane | ALR |
|---|---|
| atomising air (g/s) | atomising air (g/s) |
| (g/s) | |
| 0.063 | 0.063 |
| 0.090 | 0.090 |
| 0.115 | 0.115 |
| 0.140 | 0.140 |
| 0.65 | 0.65 |
| 0.075 | 0.84 |
| 0.077 | 1.18 |
| 0.078 | 1.48 |
| 0.079 | 1.78 |
| $\phi$ | $\phi$ |
| 0.72 | 0.72 |
| 0.084 | 0.75 |
| 0.085 | 1.06 |
| 0.086 | 1.34 |
| 0.087 | 1.61 |
| 0.79 | 0.79 |
| 0.092 | 0.69 |
| 0.093 | 0.97 |
| 0.094 | 1.22 |
| 0.096 | 1.46 |

**Table 1.** Atomising air and liquid heptane flow rates. **Table 2.** ALR.

We study the influence of the coflowing air temperature by heating the air by the Joule effect. The air temperature is monitored by a K-thermocouple placed at the bottom of the burner. The maximum temperature studied depends on the initial droplet diameter. We heat only up to 303 K for the higher atomising air flow rate whereas we heat up to 343 K for the lower flow rate. By heating the air, we indirectly heat the liquid fuel which flows through the atomizer. The heptane temperature is estimated by introducing a K-thermocouple inside the tube. The relation between the fuel temperature and the coflowing air temperature is indicated in Figure 3 for the two extreme conditions. We see that the relation is linear between these two temperatures as already observed by [4].

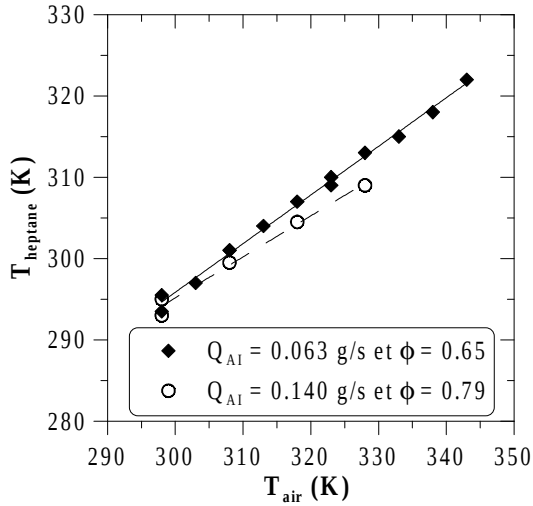


**Figure 3.** Relation between fuel temperature and air temperature.

***Instrumentation***

*Phase Doppler Anemometry*

Simultaneous two-component droplet velocity and size measurements are performed with a TSI phase Doppler anemometer. The 514.5 nm and 488 nm emission lines of an $Ar^+$ laser are used for the axial and radial velocity components, respectively. The former is also used for the droplet size measurements. The phase Doppler layout is schematised in Figure 4 and the optical parameters are summarized in Table 3. The PDA off-axis angle is chosen in order to minimize the detection of the reflected light and to make the phase-to-diameter relationship less sensitive to changes in the droplet refractive index due to temperature. According to Pitcher et al. [5], this angle is obtained from the equation :

$$\cos \phi = \frac{m^2 - 1}{m^2 + 1}$$

where $\phi$ is the off-axis angle and m the relative droplet refractive index. But, as mentioned previously, the air, and indirectly the liquid fuel, are heated, thus the relative refractive index m changes. After a careful study, we conclude that we can place the receiver at an angle close to 72°, corresponding to the angle calculated for air at 298 K. Indeed, for the air temperature range considered, the difference in the droplet diameter is less than 1 %.

Files of 50000 data points in random mode (i.e. axial and radial components independently) are collected for each PDA measurement points. Typical phase validation rates stand around 90 %. Number density and volume flux given by the phase Doppler anemometer measurements are divided by the phase validation rate for correction of the missing droplets.

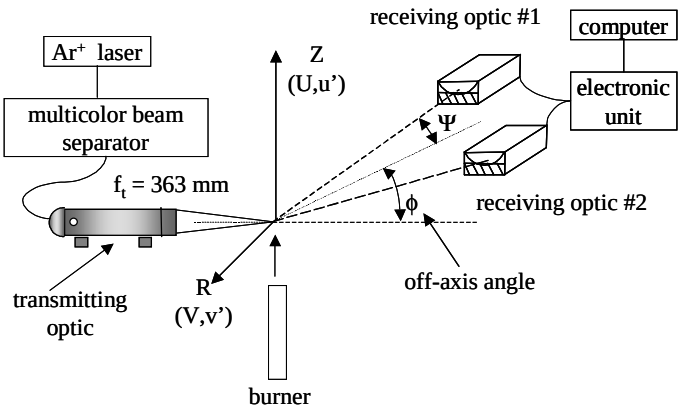


**Figure 4.** Phase Doppler anemometry facility layout.

| |
|---|
| Transmitting lens focal length : 363 mm |
| Receiving lenses focal length : 310 mm |
| Beam diameter : 2.8 mm |
| Measurement volume length : 1.2 mm |
| Measurement volume diameter : 88 µm |
| Receivers slit width : 200 µm |
| Receivers off-axis angle : 72° |
| Angle between receivers : ~ 0° |
| Heptane index of refraction : 1.385 |

**Table 3.** Optical parameters for PDA.

Axial profiles on the burner axis and radial profiles for different axial positions were performed but here only axial evolutions are presented; Z/D denotes the axial position, where D is the burner inner diameter. The origin is taken at the centre of the burner exit.

Before presenting the results obtained with PDA, we will now consider experimental uncertainties which were derived from repeated attempts to measure the same quantity. The values of uncertainties obtained are indicated in Table 4.

| Parameter | geometric diameter $d_{10}$ | surface diameter $d_{20}$ | volume diameter $d_{30}$ | Sauter diameter $d_{32}$ | number density n | volume flux F | mean axial velocity U | mean radial velocity V | fluctuating axial velocity u' | fluctuating radial velocity v' |
|---|---|---|---|---|---|---|---|---|---|---|
| Uncertainties (%) | 8 | 8 | 10 | 15 | 25 | 15 | 3 | 15 | 5 | 6 |

**Table 4.** Experimental uncertainties.

**Results and discussion**

The influence of the air temperature on the droplet characteristics is presented for the flame with an atomising air flow rate of 0.090 g/s and an equivalence ratio of 0.65, thus an air to liquid ratio of 1.18. The measurements are performed with air temperature between 298 and 328 K.

The mean axial droplet velocities U (Figure 5) increase with the temperature whereas the mean radial velocities V remain constant, close to zero. For the fluctuating droplet velocities (Figure 6), there is an increase with the air temperature.

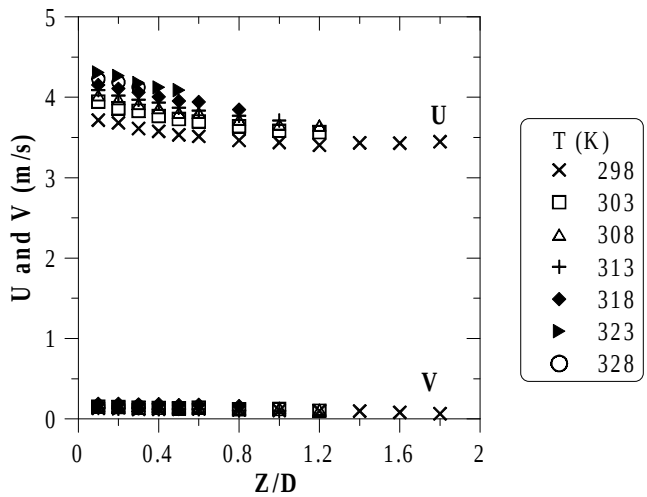


**Figure 5.** Influence of the air temperature on the mean droplet velocities.

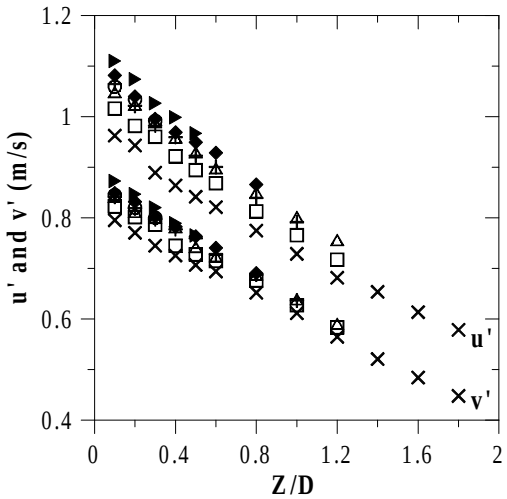


**Figure 6.** Influence of the air temperature on the fluctuating droplet velocities.

By heating the coflowing air, we increase the mean axial velocity, thus the residence time of the droplets inside the burner may decrease. This residence time is determined by integrating the relation $\frac{1}{U} = f(Z)$. The values obtained are 17.8, 15.9, 15.6 and 15.4 ms for an air temperature of 298, 308, 318 and 328 K respectively.

The influence of the temperature on the mean droplet diameter is presented on Figures 7 and 8. For the geometric diameter $d_{10}$ (Figure 7), the variation is small with the temperature : this diameter lies between 10 and 13 µm. By increasing the temperature, the diameter first increases between 298 and 303 K, then is about constant at 308, 313 and 318 K, decreases at 323 K and finally increases at 328 K. There seems to be a trend of oscillation. Concerning the Sauter mean diameter (Figure 8), there is an increase until 313 K, then a decrease at 318 K, then a big augmentation at 323 K and finally a decrease at 328 K.
The diameters increase due to the disappearance of the smaller droplets whereas the diameter decrease may result from the reduction of droplet diameter caused by vaporisation. Nevertheless, it is difficult to conclude to a real trend on the mean diameters with a small change in temperature.

No information seem to exist in the literature on the influence of air temperature on droplets inside a flame but there exists studies on sprays [4, 6, 7, 8]. Unfortunately, these studies consider generally a variation of air temperature close to 100 K and all conclude to a decrease of arithmetic and Sauter mean diameter with temperature increase. The only work in which the air temperature varies by step of 5 K was made by Downer et al. [9] who study the atomisation of various liquid, principally for agricultural applications, for air temperature between 283 and 323 K. They observe that the diameter evolution depends a lot on the liquid considered : sometimes, there is a decrease of the geometric diameter when the temperature is increased, whereas, for another liquid, there is an oscillation of the diameters (decrease then increase …).

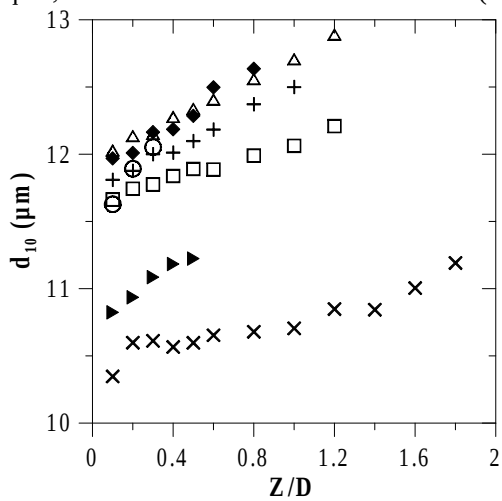


**Figure 7.** Influence of the air temperature on the mean geometric diameters.

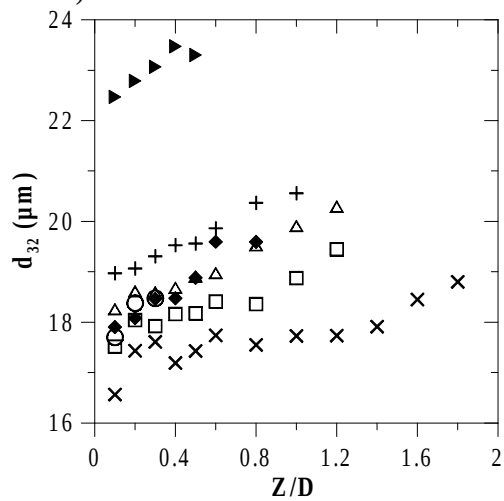


**Figure 8.** Influence of the air temperature on the Sauter mean diameters.

The number density (Figure 9) decreases when the air temperature increases, meaning that there is less droplets with hot air. For the volume flux (Figure 10), there is also a decrease.

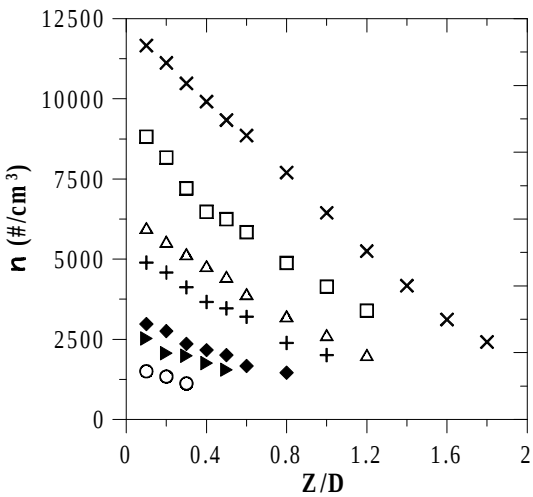


**Figure 9.** Influence of the air temperature on the droplet number densities.

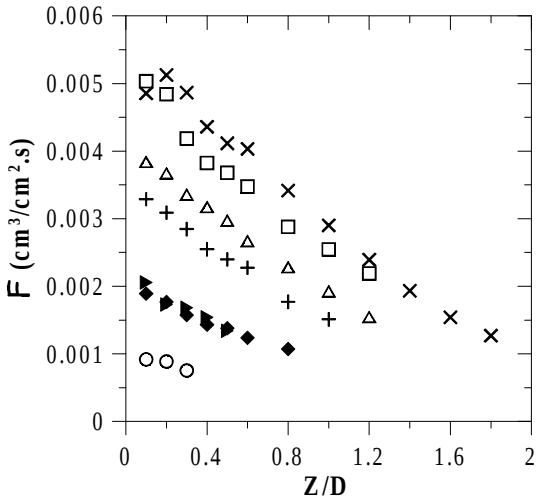


**Figure 10.** Influence of the air temperature on the volume flux.

From the results obtained with PDA, we find the parameters of the Rosin-Rammler distribution which are the most adapted to our droplets distributions. This distribution, which is the most widely used at present for drop size distribution, is defined by :

$$1 - Q = \exp\left(-\left(\frac{d}{X}\right)^q\right)$$

where Q is the fraction of the total volume contained in drops of diameter less than d; q, the spread parameter, and X, the diameter parameter, are constants. The higher the value of q, the more uniform is the spray. For most sprays, the value of q lies between 1.5 and 4.

These two parameters are presented in Figures 11 and 12 versus the air temperature. By fitting all the values obtained, it is observed that these two parameters increase with T. The drop size distribution is thus more uniform with less smaller droplets.

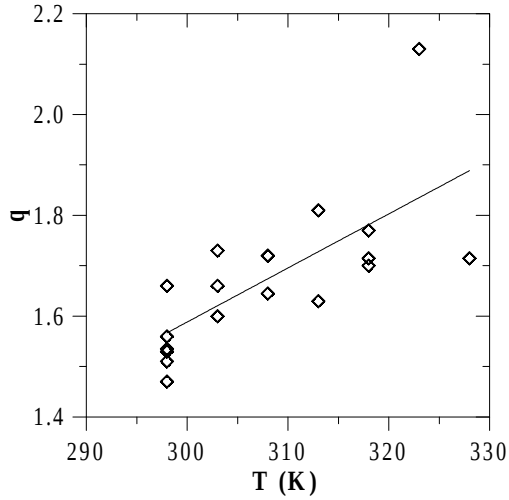


**Figure 11.** Influence of the air temperature on the q factor of the Rosin-Rammler distribution.

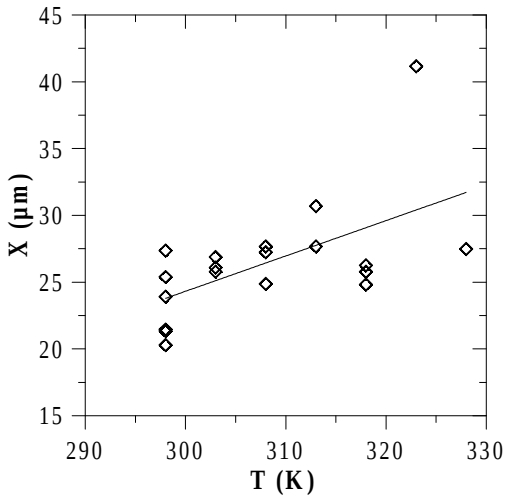


**Figure 12.** Influence of the air temperature on the X diameter of the Rosin-Rammler distribution.

From the droplet size distribution, we can define the relative span factor Δ which is expressed as :

$$\Delta = \frac{D_{v0.9} - D_{v0.1}}{D_{v0.5}} = 3.322^{1/q} - 0.152^{1/q}$$

where $D_{vi}$ is the drop diameter such that i % of total liquid volume is in drops of smaller diameter. This factor provides a direct indication of the range of drop sizes relative to the mass median diameter. We plot it versus the air temperature in Figure 13. Δ decreases when the temperature increases, with a quasi-linear relationship. The drop size distribution is narrower at higher temperature. This effect was already observed [8, 10].

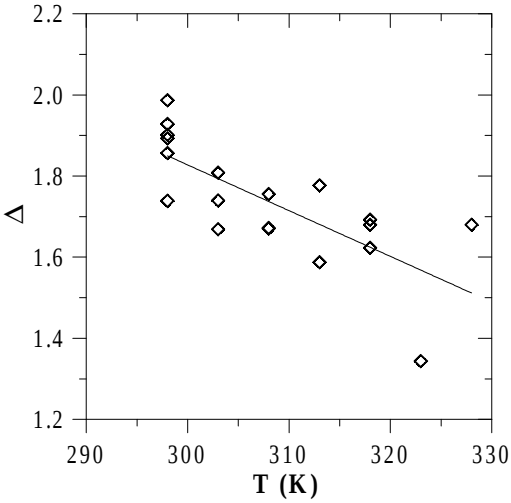


**Figure 13.** Influence of the air temperature on the span factor.

**Conclusions**

We have presented a study on lean partially prevaporised and premixed n-heptane/air flames. The phase Doppler anemometry is used to observe the influence of the coflowing air temperature on the droplet characteristics inside the flame. The conclusions obtained are the following :

- No real changes are noticed in mean drop diameters by varying air temperature by step of 5 K to a maximum temperature of 328 K.
- The number of droplets decreases by increasing temperature, indicated also by a decrease of number density and volume flux.
- The drop size distribution becomes more uniform with increasing temperature.

**References**


[1] Lefebvre, A. H., *Gas Turbine Combustion*, 2nd edition, Taylor and Francis, 1998.

[2] Ripplinger, T., Zarzalis, N., Meikis, G., Hassa, C., and Brandt, M., "$NO_x$ reduction by lean premixed prevaporised combustion", *Applied Vehicle Technology Panel Symposium*, Lisbon, Portugal, 1998, pp 7-1, 7-12.

[3] Michou, Y., *PhD thesis*, University of Orléans, France, 2000.

[4] Brandt, M., Gugel, K.O., and Hassa, C., "Experimental investigation of the liquid fuel evaporation in a premix duct for lean premixed and prevaporized combustion", *Journal of engineering for gas turbines and power*, 119, 815-821, (1997).

[5] Pitcher, G., Wigley, G., and Saffman, M., "Sensitivity of dropsize measurements by phase Doppler anemometry to refractive index changes in combusting fuel sprays", *Fifth International Symposium on Applications of Laser Techniques to Fluid Mechanics*, Lisbon, Portugal, 1990, pp. 227-247.

[6] Brandt, M., Rachner, M., and Schmitz, G., "An experimental and numerical study of kerosine spray evaporation in a premix duct for gas turbine combustors at high pressure", *Combustion Science and Technology*, 138, 313-348, (1998).

[7] Heyes, A.L., Jelercic, D., and Whitelaw, J.H., "Experiments in a small gas-turbine combustor with gas and liquid fuels", *Applied Vehicle Technology Panel Symposium*, Lisbon, Portugal, 1998, pp. 35.1-35.16.

[8] Yule, A.J., Seng, C.AH., Felton, P.G., Ungut, A., and Chigier, N.A., "A laser tomographic investigation of liquid fuel sprays", *18th Symposium (International) on Combustion*, Waterloo, Canada, August 1980, pp. 1501-1509.

[9] Downer, R.A., Hall, F.R., Thompson, R.S., and Chapple, A.C., "Temperature effects on atomization by flat-fan nozzles : implications for drift management and evidence for surfactant concentration gradients", *Atomization and Sprays*, 8, 241-254, (1998).

[10] Jiménez Mur, J.E., Castro Ruiz, F., Melgar Bachiller, A., and Giménez Olavarria, B., "Influence of air temperature on a fuel spray", *Fifteenth Annual Conference on Liquid Atomization and Spray Systems*, Toulouse, France, July 1999.