# Discharge characteristics of the atomization of superheated liquids

A. Günther*, M. Rossmeissl, K.E. Wirth
Institute of Particle Technology
Friedrich–Alexander-University of Erlangen-Nuremberg
91058 Erlangen, Cauerstrasse 4

**Abstract**

The atomization of superheated liquids utilizes the partial evaporation of the induced liquid for the generation of a dispersed spray. Compared to two-substance nozzles the addition of an additive gas is not necessary. For a description of the occurring phenomena in the dispersed phase and for evaluation of the spray quality dimensionless numbers are applied.

---

## Introduction

Conventional atomization processes succumb to energy- and process technology constrictions. The most basic version of spray generation, pressure atomization, is only improvable by modification of geometry or pressure. Techniques like rotation atomization are dependent on movable plant components. The most dispersed sprays are created by two-substance nozzles, but the great energy demand has to be considered. In addition, an additive gas has to be separated downstream of the spray. Atomization of superheated liquids combines the advantages of one-substance nozzles, e. g. simple geometry, with the small resulting droplet sizes generated by two-substance nozzles. The thermal energy fed with the liquid to the nozzle exit, yields a partial evaporation of the fluid. The generated steam causes the disintegration of the liquid phase. Even small superheating degrees result in a distinctive downsizing of the droplet. [1] [2] The whole process can be regarded as a superposition of a moderate pressure- with a high efficient two-substance atomization.

## Materials and Methods

The process flow sheet depicted in Figure 1 is applied for spray generation. The process fluid, water, is heated to the operational superheating degree in a pressure vessel by heating jackets. Afterwards the process pressure is adjusted by pressurising the vessel using air. The temperature of the fluid in the pressure vessel is monitored by thermocouples. Opening the valve at the bottom of the vessel brings the superheated liquid in contact to the environment. The droplet velocity is determined by PIV. The mass flow of the liquid is obtained by measuring the weight of the pressure vessel in a defined time interval, using load cells. Tubular nozzles with different $L_N/D_N$– proportions are used. Additionally the degree of superheating and the process pressure are varied.

## Results and Discussion

Measurements show the strong influence of the superheating on the droplet diameter. It decreases with elevated superheating and increases with decreasing pressure in the vessel. In this context the Jakob number Ja

$$Ja = \frac{T_0 - T_b}{\Delta h_v}$$

describes the ratio of the supplied heat energy to the evaporation enthalpy of the liquid and can act as a measure for the spray quality. A raised superheating degree also reduces the massflow. This can be explained by an increasing gas fraction inside the nozzle, which is caused by adjusting higher temperatures. For depiction of the flow the Cavitation number P*

$$P^* = \frac{p_0 - p_b}{p_0 - p_\infty}$$

is used. The Jakobs als well as the Cavitation number are applied for the charactarization of the flow pattern related to superheating degrees. The reduction of the $L_N/D_N$–ratio yields a velocity enhancement. Also, concerning small nozzle lengths, not a spray but a core jet was observed. The comparison between tubular and hollow-cone

* Corresponding author: a.guenther@lfg.uni-erlangen.de

nozzles demonstrated that the lastmentioned obtained a considerably more dispered spray because of the altered geometry. However, the superheating effect was reduced.

**Acknowledgement**

Special thanks go to the Deutschen Forschungsgesellschaft for the financial support of the research project within the priority program "Process sprays".

**Nomenclature**

| | |
|---|---|
| $D$ | Diameter [m] |
| $h$ | Enthalpy [$J \cdot kg^{-1}$] |
| $Ja$ | Jakob number [-] |
| $L$ | Length [m] |
| $p$ | Pressure [Pa] |
| $P^*$ | Cavitation number [-] |
| $T$ | Temperature [K] |
| $Z$ | Atomization number [-] |
| $\sigma$ | Surface tension [$kg \cdot s^{-2}$] |

Subscripts

| | |
|---|---|
| $N$ | Nozzle |
| $p$ | Particle |
| $b$ | Boiling |
| $v$ | Evaporation |
| $0$ | In front of the nozzle |
| $\infty$ | Environment |

**References**

[1] Miikkulainen, P., *TKK Disseration 53 Espoo* (2006).
[2] Monse, K., Linnepe, T., Groom, S., Walzel, P., *Chem.-Ing.-Tech.* 72:963-966 (2002).
[3] Chawla, J.M., *Chem.-Ing.-Tech.* 53:799-801 (1981).

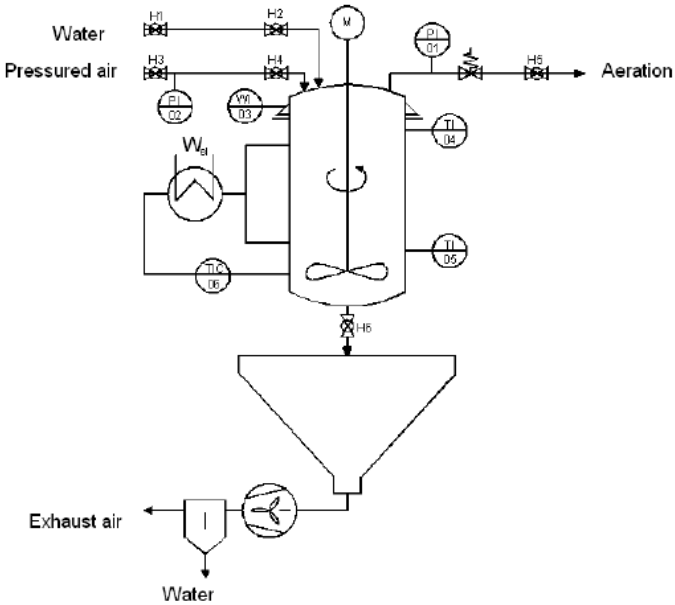


**Figure 1.** Process flow sheet for the atomization of superheated liquids