Experimental and Numerical Investigation about internal Cavitating Flow and Primary Atomization of a Large-Scaled VCO Diesel Injector with Eccentric Needle

T. Oda[1,*], M. Hiratsuka[1], Y. Goda[1], S. Kanaike[2] and K. Ohsawa[1]
[1] Department of Mechanical Engineering, Tottori University
Koyama Minami 4-101, Tottori 680-8552 JAPAN
[2] Mitsubishi Motors Co., 1, Aza-Nakashinkiri, Hashime-cho,
Okazaki 444-0908 JAPAN

Abstract

An experimental study was carried out to investigate the effects of eccentric location of needle inside a valve-covered-orifice (VCO) diesel nozzle on internal cavitating flow and primary atomization, so a 10 times large-scaled VCO nozzle was employed. A three-dimensional computational fluid dynamic (CFD) simulation of cavitating flows were performed and compared with experimental results.

Introduction

VCO nozzles are usually employed in order to reduce unburned hydrocarbon emissions of diesel engines. However some researchers [1,2] have qualitatively demonstrated that different size sprays were ejected from real-size VCO nozzle because of eccentric location of needle incorporated into the nozzle. As a result, asymmetric combustion and soot formation are caused [1]. Thus an experimental study have been performed in order to investigate the effects of asymmetric location of a needle inside a diesel nozzle on internal cavitating flow and primary atomization by using a 10 times large-scaled VCO nozzle [5,6]. In this paper we present experimental and numerical results about effects of eccentric location of a needle on internal cavitating flow and primary atomization.

Experimental Procedure and Computational Methods

Figure 1 shows the 10 times large-scaled VCO nozzle used. The large-scaled VCO nozzle had two nozzle holes. The diameter of both the nozzle holes was 2mm and the length was 8mm, providing a length to diameter ratio of 4. At an injection pressure of 0.20MPa the Reynolds number of the flow inside the nozzle hole of the large-scaled VCO nozzle achieved maximum value of approximately 40000, which was nearly the same as that of real-size diesel nozzles.

A three-dimensional CFD simulation was acquired using a STAR-CD code. The code solves the two-phase flow of cavitating bubbles inside the nozzle. The bubble growth was predicted by the modified versions of the Rayleigh equation. The simulations were done using a Volume of Fluid (VOF) method to capture the formation of an air-core in the nozzle hole, while a k-ε turbulence model was used to model the effects of turbulence on the mean flow.

Results and Discussion

Figure 2 illustrates the effect of the radial location of eccentric needle on the spray cone angle when the needle is radially positioned in the direction normal to axes of both the nozzle holes under the relatively high injection pressure and low needle lift. Spray cone angle increases with increasing the value of the radial location up to r/D=0.050, and then spray cone angle is diminished significantly. Further increase, the spray cone angle remains constant up to about 0.090, and the spray cone angle increases significantly. Finally the spray cone angle reaches almost constant value beyond 0.100, which is larger than that between 0.055 and 0.090. Two different breakup behaviors of liquid jets I and II are obtained as follows: one is the solid cone spray regime (regime I) when the needle is located near the center of the nozzle, and another is the "hollow cone spray" regime (regime II) when the needle is located relatively far from the center of the nozzle.

On the contrary, four regimes of cavitating flows are observed. As the needle located near the center of the nozzle, upperside and lowerside sheet cavitation is apparent (Regime A: Fig. 3(a)). Regime B is the so-called transient regime. Short bubble of the vortex cavitation is produced with bubbles of sheet cavitation around the entrance of the hole. This bubble of the vortex cavitation must be immediately elongated at the radial location of 0.10mm. As a result, the tip of the bubble reaches penetrates to the exit of the hole, and the spray cone angle

* Corresponding author: odate@mech.tottori-u.ac.jp

significantly diminished (Regime C: fully covered vortex cavitation as shown in Fig. 3(b)). Finally the bubble of the vortex cavitation becomes short as the needle is located enough far (Regime D).

Calculated spray cone angles in Fig. 2 are estimated from axial and rotational momenta of ejected liquid, which are obtained by using STAR-CD code. In general, numerical and experimental results are in good agreement up to radial location of 0.18mm. Numerical simulation can provide production of cavitating bubbles near the entrance of the hole at the radial location of 0.03. In contrast to the experimental result, short air-core is obtained by using the code at the radial location of 0.06. However it is noted that production of a bubble of the voltex cavitation or an air-core lead to reduction of spray cone angle.

Acknowledgement
Mr. Ken Aoki is thanked for his experimental support.

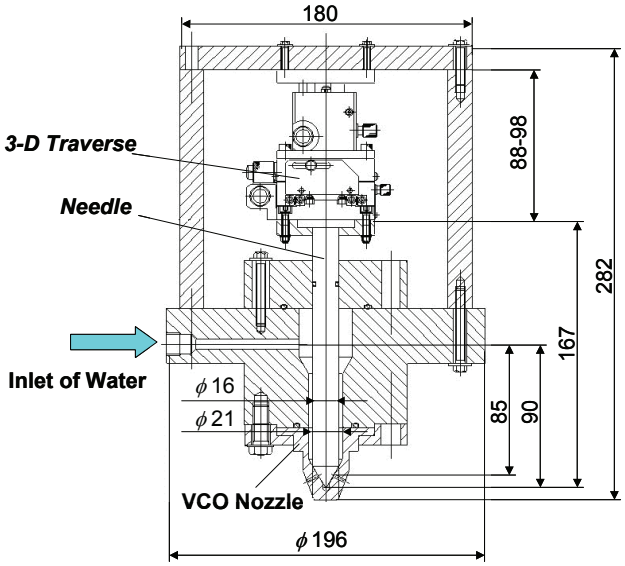

Figure 1. Schematic of a nozzle holder with a large-scaled VCO nozzle.

Nomenclature

D	diameter of nozzle holes [mm] (D =2mm)
L_h	needle lift [mm]
r	radial location of needle [mm]
ΔP_{inj}	injection pressure [MPa]
θ	spray cone angle [deg.]

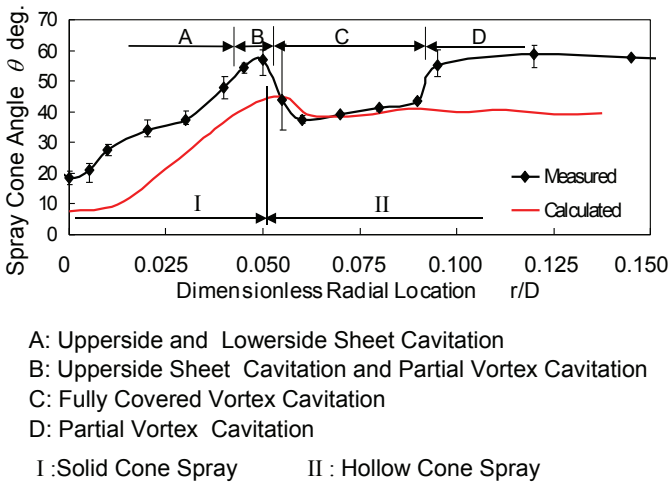

Figure 2. Effect of the radial location of eccentric needle on the spray cone angle. (ΔP_{inj}=0.20MPa, L_h/D =0.25)

References

[1] Renner, G, Koyanagi, K. and Maly, R. R., *Proc. the Fourth International Symposium on Diagnostics and Modeling of Combustion in internal Combustion Engines (COMODIA 98)*: 477-482 (1998).
[2] Fettes, C., Heimgärtner, C. and Leipertz, A., *The Fifth International Symposium on Diagnostics and Modeling of Combustion in Internal Combustion Engines (COMODIA 2001)*: 54-59 (2001).
[3] Oda, T., Goda, Y., Kanaike, S, Aoki, K. and Ohsawa, K., *The 12th Annual Conference of ILASS-Asia and The 17th Symposium (ILASS-Japan) on Atomization*: 21-26 (2008).
[4] Oda, T., Goda, Y., Kanaike, S., Aoki, K. and Ohsawa, K., *Proc. International Annual Conference on Liquid Atomization and Spray Systems*: Paper No.132 (2009).

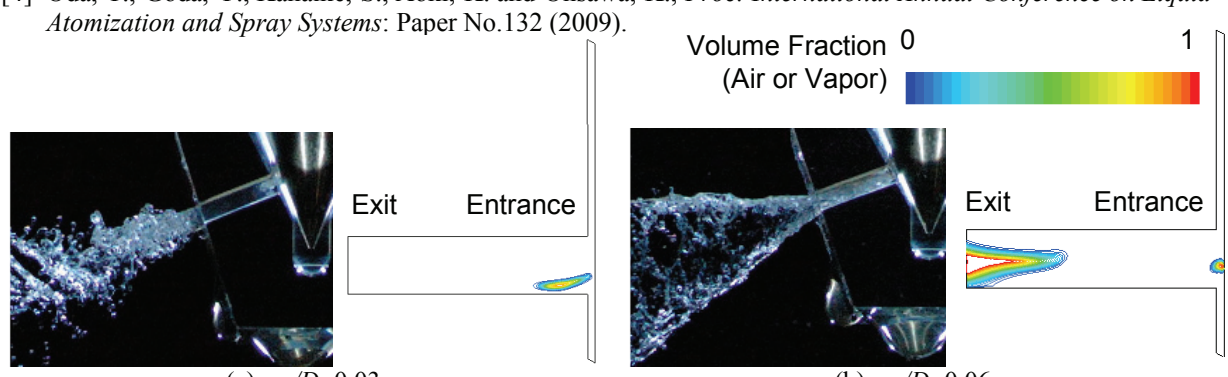

(a) r/D=0.03 (b) r/D=0.06

Figure 3. Photographs of cavitating flow inside a nozzle hole and void fraction obtained numerically. (ΔP_{inj}=0.20MPa, L_h/D =0.25)