The effect of co-current gas velocity on heat transfer of the pulse spray

A.D. Nazarov*, A.F. Serov, V.I. Terekhov, and K.A. Sharov
Siberian Branch of Russian Academy of Sciences
Institute of Thermophysics
Novosibirsk, Russia

Abstract

In this report we have described the experimental setup on investigation of interaction between the pulse spray and flat heat exchanger; investigation results on heat transfer under the conditions of evaporation cooling are also presented here. The pulse spray generator consists of a programmable aerosol source, which allows formation of droplet groups with duration of succession frequency in a continuous gas flow given in a wide range. Efficiency of flat heat exchanger cooling was registered by the original digital calorimeter developed specially. It is shown that an increase in the velocity of the co-current gas flow leads to heat transfer intensification. Frequency of pulse movement and their duration effect significantly heat transfer regularities, what is caused by a change in heat transfer conditions from evaporation to formation of liquid films on the heat-exchange surface.

Introduction

Cooling of heated surfaces by the gas-droplet jets is widely used in metallurgy, power engineering, aerospace, and other technology applications. Thus, the search for the methods of cooling intensification on the basis of pulsating and scanning gas-droplet flows is continued [1-8]. The main avenues of these studies [2-5] were aimed at examination of the effect of spray flow harmonic modulation on its gas-dynamic structure and possibility of control for the heat transfer coefficient. The effects of mechanical modulators, piezoelectric activators [4], and acoustic field [5] on the spray were studied. The works on pulse sprays with combustion are of the particular interest for improvement of intrachamber processes in power installations [6,7].

Far-reaching prospects for improvement of heat transfer efficiency are opening up at application of controllable sources of the gas-droplet flows in the cooling systems [1,8]. Depending on heat loading of the heat exchanger these systems allow us to set the parameters of the cooled gas-droplet flow via a change in duration, frequency and supply point of the liquid phase on the heat exchanger surface, developing the optimal conditions for heat transfer.

By now complexity of processes in pulse sprays and their multifactor character do not allow the achievement of the total pattern of interconnected thermogasodynamic processes. One of the research avenues is determination of liquid and gas component contributions into heat transfer. The available studies give the answer to insignificant part of the questions; therefore, these problems require following detailed investigation.

Setup and Measurement Methods

The experimental setup (Fig.1) consists of the heat exchanger with calorimeter and programmable controllable multinozzle source of pulse spray with separate supply of liquid and gas phases. The main studies have been carried out, when the distance between the heat exchanger and source was L = 230 mm. At this position on a cross-section of heat exchanger surface the source of pulse gas-droplet flow forms a two-phase flow with the area of 300 × 300 mm^2.

The heat exchanger is made of high heat conducting copper with the plane sizes of 140 × 140 mm and thickness of 50 mm. In these experiments we have maintained the constant temperature of heat exchanger surface t_w = const =70 °C.

The calorimeter is made by the principle of registration of the amount of heat obtained by the heat exchanger from the heat energy source (maximal supplied power of the electric boiler is P = 6 kW) under the dynamic conditions. According to the practice, the total measurement error for the heat flux from the heat exchanger with consideration of heat losses (heat-conducting accessories, etc.) is within 1.5 ÷ 3 %, what allows determination of heat transfer parameters and their dependence on the cooling flow with the permissible error (< 10 %). To register fast (< 0.01 c) heat transfer processes, the sensor of local heat flux was mounted in the center of the heat exchanger surface [9].

The source of multiple-jet pulse spray is made in the form of a two-chamber unit. On the flat part of injector there are sixteen liquid sprayers in the form of the 4 × 4 matrix and 25 nozzles with the outlet diameter of 0.35 mm for the co-current air flow.

* Corresponding author: nazarov@itp.nsc.ru

The liquid sprayer is an injector of four nozzles with diameter d = 0.125 mm, electromagnetic valve, and time of transition from one state to another (open/close and vice versa) T_{tr} < 0.1 ms. This is significantly less than time of valve holding in the open state T_i in experiments with formation of the droplet phase, which was varied in the range from 1 to 10 ms and frequency of valve opening F_i from 1 to 50 Hz. Together with parameter T_i the pressure at the unit inlet (P_l = 0.05 ÷ 0.6 MPa) effected the liquid flow through the sprayers and droplet size. A change in the pressure allowed formation of the flow with a given velocity of the liquid phase in the range from 0 to 20 m·s^{-1}. Each sprayer was calibrated, and the total flow rate of the droplet phase was determined by data obtained.

Liquid distribution over the cross-section of the aerosol flow was determined by a high-frequency volumetric capacitance probe [8]. According to measurements performed at distance L = 0.2 m from the source along the spray cross-section at different pressures at liquid valve and gas nozzle inlets, deviation of the flow density from the average value does not exceed 5 %. To observe droplet behavior at their motion towards the heat exchanger and determine their size, they were recorded by the high-speed digital camera with frame frequency F = 5 kHz. According to analysis of video records, at the initial region of motion (L ~ 60 mm) the jets are split into separate droplets with the length of (0.2 ÷ 0.5) mm. Near the plate surface (L ~ 200 mm) we can observe two main sizes of droplets: large (0.12 ÷ 0.15) mm and small ones (0.045 ÷ 0.050) mm.

The measurements of the air flow velocity have shown that distribution of velocity in the heat exchanger cross-section is uniform distribution over the whole heat exchanging surface. For the specific conditions the air flow velocity is constant in time. At a change in conditions this velocity can vary in a wide range (0 ÷ 25 m/s) because of a change in the inlet pressure (P_g = 0.05 ÷ 0.6 MPa).

Results and Discussion

Heat and mass transfer was measured under the atmospheric conditions and ambient temperature t_0 = 20 °C. The temperatures of air and liquid aerosol phases were as follows: liquid temperature was (7 ÷ 13) °C; air temperature was (20 ÷ 22) °C; and temperature of the heat exchanger surface was t_w = 70 °C.

The velocity of aerosol phases varied depending on the conditions at the initial region of motion (L ~ 60 mm): air velocity changed within 0 m·s^{-1} ÷ 25 m·s^{-1}; water velocity changed within 1 m·s^{-1} ÷ 20 m·s^{-1}.

At the first stage we have studied the effect of the pulse droplet flow on heat transfer at the stable air flow. Figure 2 demonstrates the effect of frequency and duration of spray supply pulse on the heat transfer coefficient at the constant velocity of the co-current air flow (8 ms^{-1}) and ratio of mean-mass velocities of liquid and gas phases in the range of $\rho_l V_l (\rho_g V_g)^{-1}$ = 0 ÷ 0.01.

The heat transfer coefficient average for the heat exchanger surface was determined as

$$H = Q(f(t_w - t_l))^{-1}, \quad (1)$$

where Q is heat energy supplied to the heat exchanger; f is its area, and t_w and t_l are temperatures of the heat exchanging surface and liquid in the spray flow.

At frequency of 1 Hz and time of valve opening of 2 and 10 ms (the curves for other situations are in-between them) the values of heat transfer coefficient differ almost by the factor of 1.5. In both cases on the heat exchanging surface there are the conditions of evaporation cooling, when the liquid part of spray evaporates on the heat exchanging surface before the next portion of spray arrives. With a rise of frequency of liquid phase motion the value of heat transfer coefficient approaches maximum asymptotically. When the valve is opened during 10 ms, the conditions of evaporation cooling on the heat exchanger surface turn into the conditions of film cooling. For valve opening of 2 ms, cooling stays in the form of evaporation. Under these conditions we can achieve the optimum of cooling efficiency, when the amount of droplets precipitated on the surface is sufficient to complete evaporation by the moment of next portion arrival.

The family of dependences of heat transfer coefficient H on specific density of droplet flow R in shown in Fig.3 for different opening conditions of aerosol source valves: T_i = 0.002 s ÷ 0.01 s, F_i = 1 Hz − 10 Hz. The average air velocity is 8 m·s^{-1}; the ratio of mean mass velocities of liquid and gas phases is (0 ÷ 0.01). Depending on pulse duration the experimental data diverge significantly. For shorter pulses the maximum of heat transfer coefficient is achieved at relatively less rates of irrigation. Hence, application of short pulses for liquid supply is the most efficient from the point of heat transfer intensification.

The effect of the co-current air flow and pulse aerosol on the heat transfer coefficient is shown in Fig. 4. Dependence of the heat transfer coefficient on the air flow velocity without aerosol droplets is shown in the figure (curve 1). This curve is the basic dependence for situations with a presence of droplet phase in the jet. The contribution of the second phase (moisture droplet T_i = 2 ms) is shown by curves (2 - 5) for the conditions with opening frequency of the source valves F_i = (1,2, 3, 5) Hz. A rise of the heat transfer coefficient at an increase in the air flow velocity is obvious for every pulse spray. The co-current air flow increases the rate of heat transfer coefficient increase with a rise of frequency of droplet area motion (F_i). Thus, we can make the conclusion that

the co-current air flow in the pulse spray increases heat transfer via intensification of evaporation of liquid precipitated on the heat exchanger surface.

Dependence between the ratio of heat transfer coefficients H_V/H_0 at droplet-pulse irrigation of heat exchanger for $T_i = 2$ ms and $F_i = (1 \div 5)$ Hz and the gas-droplet and co-current air flow is shown in Fig. 5. Here H_0 is the heat transfer coefficient at droplet-pulse irrigation without co-current air flow ($V_g = 0$ m·s^{-1}), H_V is the heat transfer coefficient of the pulse aerosol with the co-current air flow with velocity $V_g = 2$ m·s^{-1}. The maximal effect of the co-current air flow on the heat transfer coefficients has been determined for frequency of droplet pulses $F_i = 1$ Hz (120 %). With a rise of F_i value H_V/H_0 decreases. A decrease in the heat transfer coefficient is explained by the fact that for rising frequency of droplet area motion the amount of liquid precipitated on the heat exchanger surface increases. The air flow velocity ($V_l = 2$ m·s^{-1}) is not sufficient for efficient evaporation of liquid from the heat exchanging surface. Film cooling is maintained on the heat exchanger surface. Thus, we can conclude that for heat transfer intensification by the pulse gas-droplet flow with the given flow rate of liquid phase the velocity of co-current gas component should provide liquid evaporation from the heat exchanger surface.

Conclusion

The developed experimental setup allowed complex studies in the field of fast heat and mass transfer processes at cooling by the pulse spray and determination of contribution of the co-current air flow.

According to investigations the velocity of co-current air flow in the pulse aerosol increases the heat transfer coefficient. At this the air flow contribution to heat transfer depends on the flow rate of droplet phase, determined by the ratio of duration T_i and frequency F_i of the droplet area.

The studies showed that evaporation cooling on the heat exchanging surface is preferable for heat transfer intensification in systems with pulse gas-droplet irrigation. Application of short pulses of liquid supply in the cooling gas-droplet flow is more efficient for heat transfer intensification.

The work was financially supported by the Russian Foundation for Basic Research (project No. 09-08-00197-a).

Nomenclature

F	frequency, [Hz]
H	heat transfer coefficient, [W/m^2 K]
J	energy, [kg·m^2·s^{-2}]
L	distance between the aerosol source and heat exchanger surface, [m]
T	pulse duration, [s]
P	pressure, [MPa]
t	temperature, [°C]
ρ	density, [kg·m^{-3}]
V	velocity, [m·s^{-1}]
R	specific density of droplet flow, [kg·m^{-2}·c^{-1}]

Subscripts

g	gas
l	liquid
I	pulse
w	heat exchanging surface

References

[1] Nazarov A.D., Terekhov V.I, Serov A.F. and K.A. Sharov K.A., *7th International Symposium on Heat Transfer (ISHT 08)*, Beijing, China, October 26-29, 2008, CD.
[2] Pavlova A. A., Otani K. and Amitay M., *Int. J. Heat and Fluid Flow* 29: 131 – 148 (2008).
[3] Panao M.R.O. and Moreira A.L.N., *Int. J. Heat and Fluid Flow* 30: 117−130 (2009).
[4] Pothos S., Longmire E.K., *11-th Int. Symposium on Applications of Laser Techniques to Fluid Mechanics,* Lisbon., Portugal, 2002, CD.
[5] Sujith R.I., *Exp. Fluids* 38: 576 − 587 (2005).
[6] Zhu M., Dowling A.P., Bray K.N.C., J. *Eng. Gas Turbine Power* 124: 20−30 (2002).
[7] Dubey R.K., Black D.L., Mc. Quay M.Q., Carvalho Jn.J.A., *Combust. Flame* 110: 25-39 (1997).
[8] Nazarov A.D., Serov A.F., Tererhov V.I., Sharov K.A., *Engineering Journal of Physics* Vol. 82, 6: (2009).
[9] Mityakov V.Yu., *Doctoral thesis, St.Petersburg State Polytechnic University*, 239 (2005).

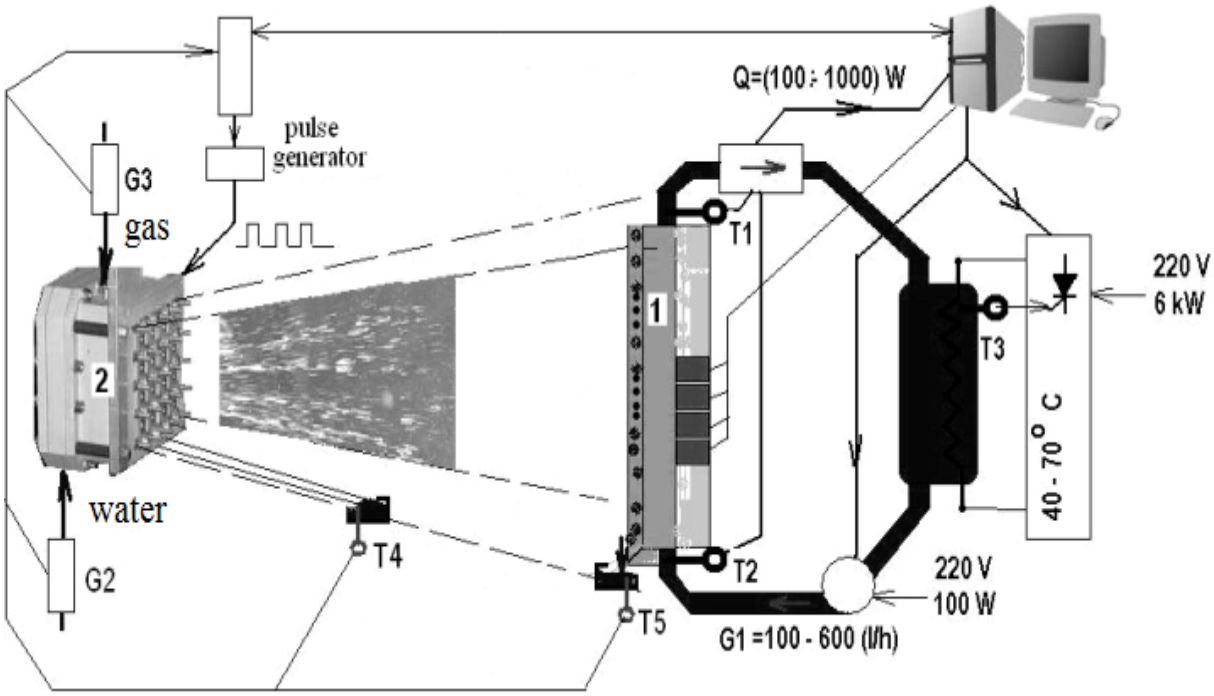

Figure 1. Spray experimental setup

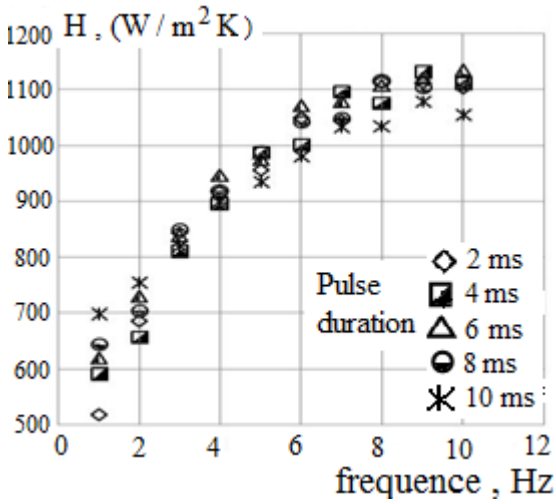

Figure 2. Heat transfer coefficient vs. frequency and duration of spray

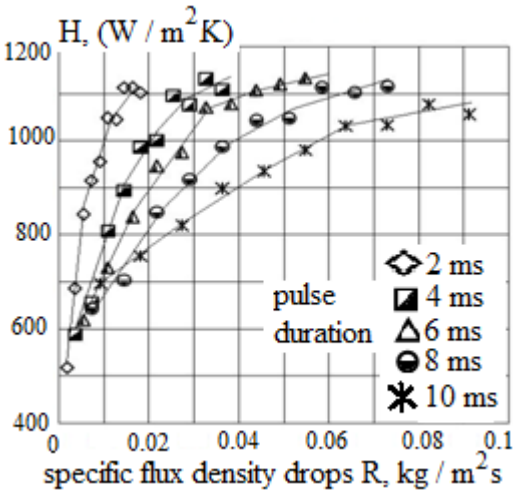

Figure 3. The effect of irrigation rate and pulse duration on the heat transfer coefficient

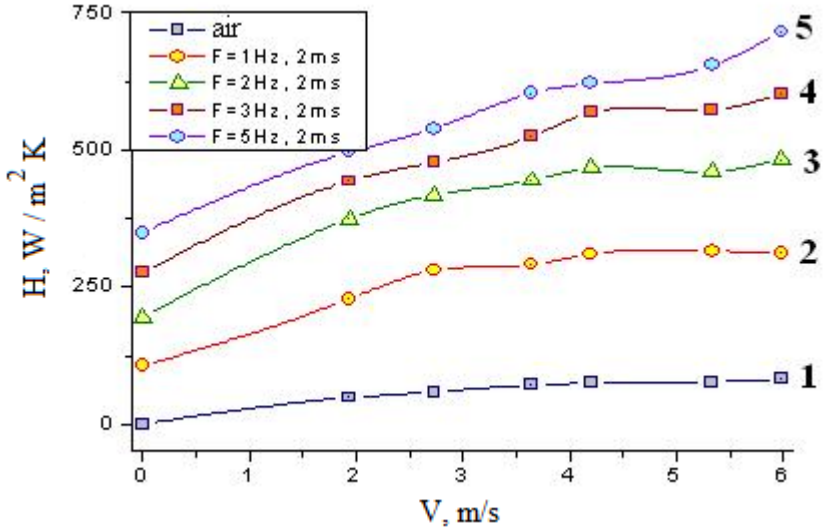

Figure 4. Dependence of heat transfer coefficient on air velocity

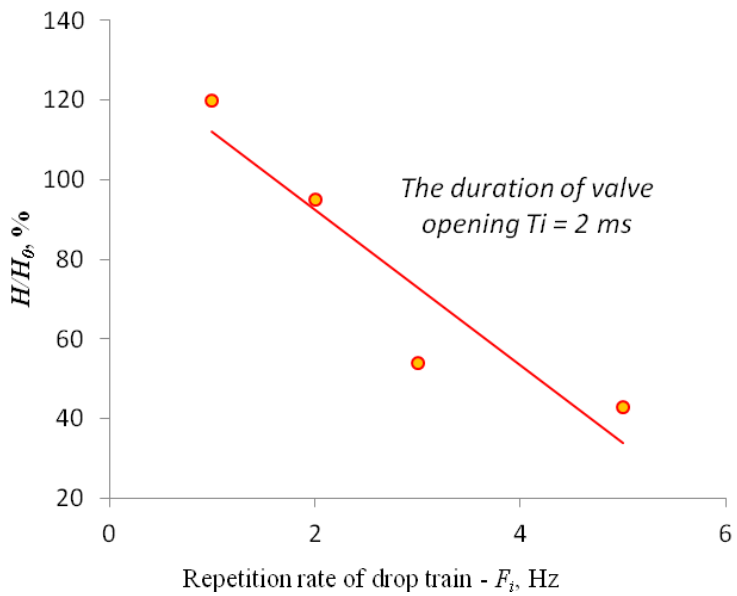

Figure 5. Changes in heat transfer coefficient at application of the air flow